TABLE TYPE SOFT ICE CREAM MACHINE

ICETRO

ISI-163TT

W x D x H inch(mm)

20"(510) x 33"(845) x 31"(800)

ISI-163TT

Feature

- SIMPLICITY
- PERFORMANCE
- RELIABILITY
- EXCELLENT TASTE

Direct Motor Drive(operation)
Less noise & Less vibration

Agitator operation
Keep ice cream mix liquid separation / Circulate the ice cream mix evenly for temperature maintenance

Mix Hopper
One, 5.5 liter (1.45 gallon) / Maintain the temperature of mix, under 5℃ (41℉) in Auto & Standby modes

Freezing Cylinder
One, 1.6 liter(0.42 gallon) x 2EA

Artificial Intelligence Control System
A.I Control System makes high quality soft serve ice cream.

Dimensions

Dimensions	Net	Gross
Width	20"(510 mm)	27"(676 mm)
Depth	33"(845 mm)	36"(904 mm)
Height	31"(800 mm)	40"(1,021 mm)
Weight	395 lbs(179 kg)	430 lbs(195 kg)

Certification

CE ETL Intertek ETL Intertek ISO 9001

ICETRO
- 1565 W. Broadway, Anaheim, CA 92802
- TEL: 714-215-4864, 4874
- WEB : www.icetroamerica.com •e-mail: icetro@icetroamerica.com

Dimension – Unit : mm (inch)

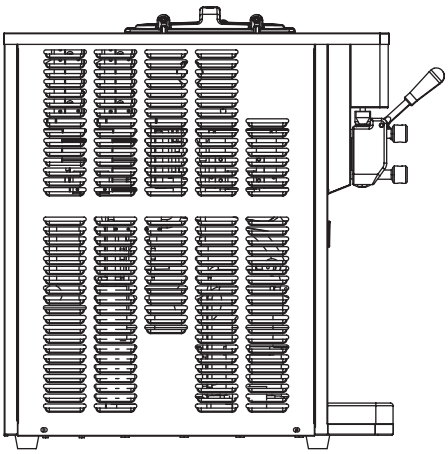

LEFT SIDE

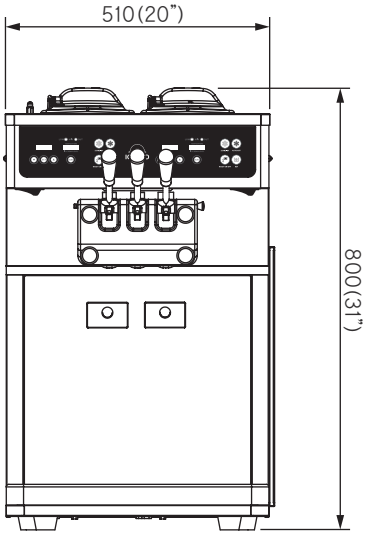

FRONT

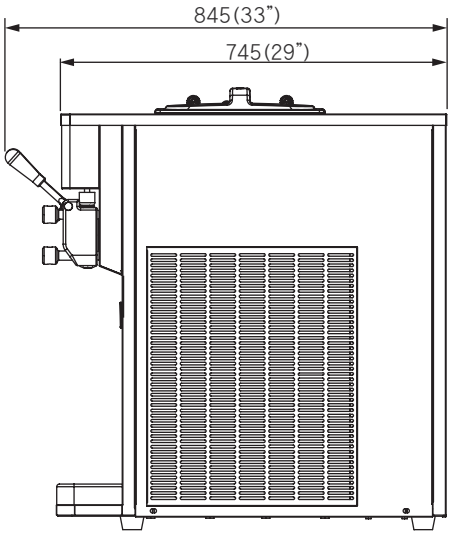

RIGHT SIDE

Specification

Model	Mix Hopper Capacity	Cylinder Capacity	Consecutive Dispensing	Dasher Motor	Max. Production	First Dispensing
ISI-163TT ISI-163TB	5.5 liter (1.45 gallon) x 2EA	1.6 liter (0.42 gallon) x 2EA	∞ cups (100 cc/3.5 oz)	0.37 KW	24 kg (53 lbs/h)	6~8 min
	Cylinder Compressor	Power Consumption	Mix Hopper Compressor	Cooling System	Electrical Option	
	1 HP x 2EA (R-404A)	2,700 W	0.35 HP (R-134A)	Air-Cooled	220~240V/50Hz/1PH	
		3,120 W			208~230V/60Hz/1PH	

※ Production Capacity may vary depending on ambient temperature.

Detail View

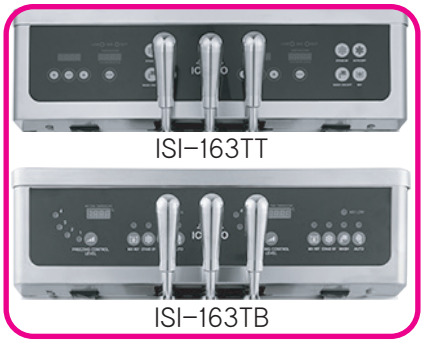

ISI-163TT

ISI-163TB

ISI-163TT : LCD TOUCH BUTTON
ISI-163TB : TACT SWITCH BUTTON

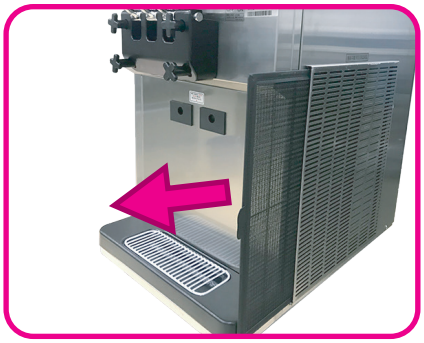

Pull out to remove the Air filter at the right side

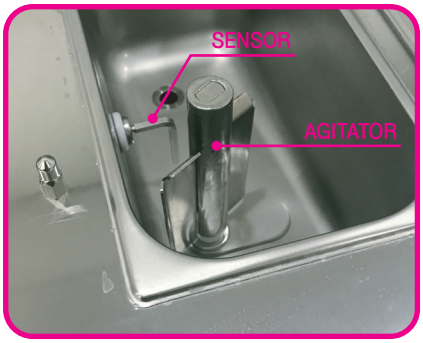

Agitator Operation
Automatically Detect MIX OUT & MIX LOW by the sensor

※ Design and Specification are subject to change without notice.

ICETRO
• 1565 W. Broadway, Anaheim, CA 92802
• TEL : 714-215-4864, 4874
• WEB : www.icetroamerica.com • e-mail : icetro@icetroamerica.com